LIEBHERR

Design Guide 2011

Wine and Undercounter

Welcome

Liebherr's engineering excellence in Germany provides the largest selection of freezers, refrigerators and wine refrigerators worldwide.

Liebherr-appliances specializes in the manufacturing of high quality freezers and refrigerators. With more than 300 basic models, we have the widest selection in the world. Liebherr appliances feature premium quality, numerous innovative product ideas and advanced design. Liebherr freezers and refrigerators are manufactured at three modern production plants:

Liebherr Marica in Bulgaria, Liebherr-Hausgeräte Ochsenhausen GmbH in Germany and the Liebherr-Hausgeräte Lienz GmbH in Austria.

The appliances for the North American market are produced in Austria and in Germany.

Liebherr is commited to the protection of the environment and recognizes it as a critical priority. To guarantee an optimum and consistent implementation, all ecological aspects were observed and integrated into the quality control of Liebherr in compliance with DIN EN ISO 9001.

Liebherr's Commitment to the Environment

The components of Liebherr products can be recycled when the necessary resources are available. A concern for the environment and a desire to protect resources has led to increased levels of recycling year after year. When Liebherr manufactures products, it is essential that the recyclable recovery rate of the materials we use constantly increases.

Recycling is a common goal among all manufacturers, municipalities and recycling companies to protect our environment. Protecting the environment and producing products which have a low impact on the environment, is one of Liebherr's core values. When the time comes, please attempt to dispose of your old appliances in an environmentally safe and friendly manner.

LIEBHERR WARRANTY PLAN

FULL TWO YEAR WARRANTY - For two years from the date of original purchase, your Liebherr Warranty covers all parts and labor to repair or replace any part of the product which proves to be defective in materials or workmanship.

FULL FIVE YEAR WARRANTY - For five years from the date of original purchase, your Liebherr Warranty covers all parts and labor to repair or replace any components that prove to be defective in materials or workmanship in the sealed system. The "Sealed System" means only the compressor, condenser, evaporator, drier and all connecting tubing.

LIMITED 6TH THROUGH 12TH YEAR WARRANTY - From the 6th through 12th year from the date of original purchase, your Liebherr Warranty covers all parts that prove to be defective in materials or workmanship in the sealed system (parts only).

For Service and Parts in the U.S.:
Liebherr Service Center
15545 N. 77th Street
Scottsdale, AZ 85260

Phone: (480) 998-0141
Fax: (480) 998-7877
Toll Free: **1-866-LIEBHERR or 1-866-543-2437**

www.liebherr.us/HG

For Service and Parts in Canada:
Euro Parts
579 Campbell Street,
P.O. Box 759,
Lucknow, Ontario, N0G 2H0

Phone: (519)528-5005
Fax: (519)528-5001
Toll Free: **1-888-Liebherr or 1-888-543-2437**

www.euro-parts.ca
or
www.liebherr.ca/HG

Contents

General Remarks

Safety Warnings I

Electrical Requirements & Safety II

Area Requirements III

Safety Regulations IV

Wine and Undercounter

WU 4000 / 5600 1

WS 4000 / HWS 1800 2

WS 14300 / 13500 3

RU 500 / RO 500 4

Undercounter Wine Cabinet WU 4000/5600 5
Unit and Cabinet Dimensions 6

Freestanding Wine Cabinet WS 4000 7
Unit Dimensions 8

Built In Wine Cabinet HWS 1800 9
Unit and Cabinet Dimensions 10

Freestanding Wine Cabinet WS 14300 11
Unit and Cabinet Dimensions 12

Freestanding Wine Cabinet WS 13500 13
Unit and Cabinet Dimensions 14

Undercounter Beverage Center RU 500 15
Unit and Cabinet Dimensions 16

Outdoor Refrigerator RO 500 17
Unit and Cabinet Dimensions 18

Accessories for Liebherr Wine and Undercounters 19

I. Safety Warnings

PLEASE READ AND FOLLOW THESE INSTRUCTIONS

This design guide contains Warning and Caution statements. This information is important for planning a safe and efficient installation. Please refer to the Installation Manual specific to your model for complete installation instructions.

This design guide is intended for planning purposes and is not a replacement for your appliance's Use and Care Manual which contains important information on how to use Liebherr appliances.

Always read and follow all Warning and Caution statements!

⚠ WARNING

Warning indicates a potentially hazardous situation which, if not avoided, could result in death or serious injury.

⚠ CAUTION

Caution indicates a potentially hazardous situation which, if not avoided, may result in minor or moderate injury.

IMPORTANT
This highlights information that is especially relevant to a problem-free installation and operation.

Make sure incoming voltage is the same as the unit rating.

To reduce the risk of fire, electric shock, or personal injury, the installation work and electrical wiring must be done by a qualified electrician in accordance with all applicable codes and standards, including fire rated construction.

To the Installer

It is very important that the guidelines and instructions are followed in this design guide to ensure proper installation and operation of the unit. The Installation Guidelines section contains important information for making sure the installation is correct. Read and understand all the information and installation guidelines in this manual before the unit is installed.

It is also very important to **know** the Safety Information.

II. Electrical Requirements & Safety

A 115 Volt, 60 Hz, 10 Amp (15 Amp for side-by-side installation) fused electrical supply is required. We recommend using a dedicated circuit for these appliances to prevent electrical overload. Comply with the National Electrical Code as well as local codes and ordinances when installing the receptacle.

⚠ WARNING

Do not ground to a gas pipe. Check with a qualified electrician if you are not sure the appliance is properly grounded. Do not have a fuse in the neutral or grounding circuit.

⚠ WARNING

ELECTROCUTION HAZARD

Electrical Grounding Required. This appliance is equipped with a three-prong(grounding) polarized plug for your protection against possible shock hazards.

- **Do not remove the round grounding prong from the plug.**
- **Do not use a two-prong grounding adapter.**
- **Do not use an extension cord to connect power to the unit.**
- **Do not use a power cord that is frayed or damaged.**

III. Area Requirements

Verify the following:

- Finished kitchen floor height is level. Refrigerator must be shimmed to the floor level, or levelled, to make sure, air vents are not obstructed.
- Remove anything attached to the rear or side walls that can obstruct refrigerator opening.
- Cutout dimensions are accurate.
- Electrical outlet is in correct location.

Do not install this unit next to any other refrigerator or freezer except another Liebherr model. Liebherr models are designed to allow side by side installation. They are equipped with a heating system to eliminate condensation when units are installed side by side. Installing this unit next to any other refrigerator or freezer can cause condensation or cause damage to the Liebherr unit.

⚠ CAUTION

To protect the refrigerator from possible damage, allow the appliance to stand 1 hour in place before turning the electricity on. This allows the refrigerant and system lubrication to reach equilibrium.

IV. Safety Regulations

The appliance complies with UL250 and CAN/CSA-C 22.2 No. 63 and is designed to cool, freeze, store food as well as make ice (if equipped). They are designed for household use.

These appliances are set to operate within specific ambient temperature limits according to their climate rating. These temperature limits should not be exceeded. The correct climate rating for your specific model is indicated on the model plate. (See Use & Care Manual.)

This is explained as follows:

Climate Rating	Set for Ambient Temperatures of
SN	50°F to 90°F (10°C to 32°C)
N	61°F to 90°F (16°C to 32°C)
ST	61°F to 100°F (16°C to 38°C)
T	61°F to 109°F (16°C to 43°C)
SN-ST	50°F to 100°F (10°C to 38°C)
SN-T	50°F to 109°F (10°C to 43°C)

- The refrigerant circuit has been tested for leaks.

Wine and Undercounter

The **Liebherr Wine Cabinets** are available as integrated and as freestanding appliances. Store red and white wines according to your preference - use the entire cabinet for one or store both, each at its optimum drinking temperature. The glass door with its high-quality elegant stainless steel frame allows you to enjoy a top-quality wine experience before you even select a bottle.

Undercounter Beverage Center: Choose the RU 500 for stylish storage or presentation of beverages, featuring a glass door providing a clear view, with elegant stainless steel frame. Bottles and cans can be chilled in this appliance.

Outdoor Refrigerator: The Outdoor Refrigerator RO 500 is the ideal solution for your outdoor kitchen. With it's completely stainless steel surround, the unit is well protected against weather influences and corrosion. In the interior, there is plenty of space for the storage of meat, beverages and all that is needed for a perfect barbecue session.

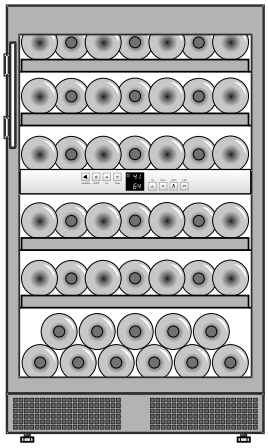

WU 4000

Energy Supply:	115V / 60Hz / 2.5A
Climate Rating:	SN-ST
Door hinges:	right/reversible
Door:	glass door with stainless steel

- Telescopic wine racks
- Activated charcoal filter
- Pleasant LED-light

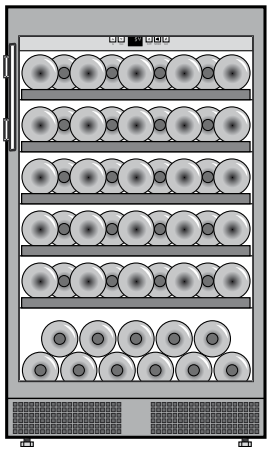

WU 5600

Energy Supply:	115V / 60Hz / 1.5A
Climate Rating:	SN-ST
Door hinges:	right/reversible
Door:	glass door with stainless steel

- Telescopic wine racks
- Activated charcoal filter

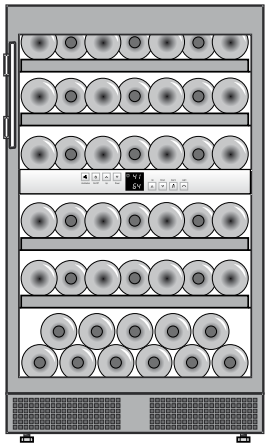

WS 4000

Energy Supply:	115V / 60Hz / 1A
Climate Rating:	SN-ST
Door hinges:	right/reversible
Door:	glass door with stainless steel

- Telescopic wine racks
- Activated charcoal filter
- Pleasant LED-light

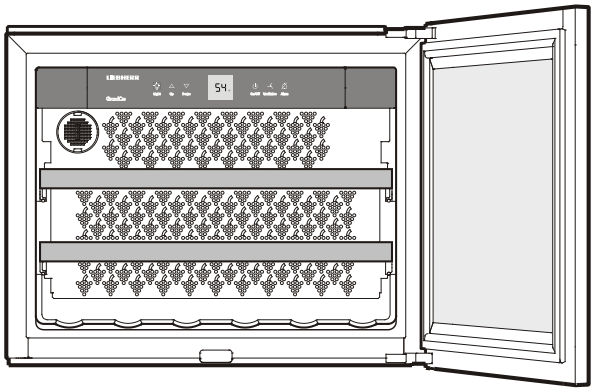

HWS 1800

Energy Supply:	115V / 60Hz / 1.5A
Climate Rating:	SN
Door hinges:	right
Door:	glass door with stainless steel

- Touch electronic control system
- LED lighting
- Telescopic wine racks
- Activated charcoal filter

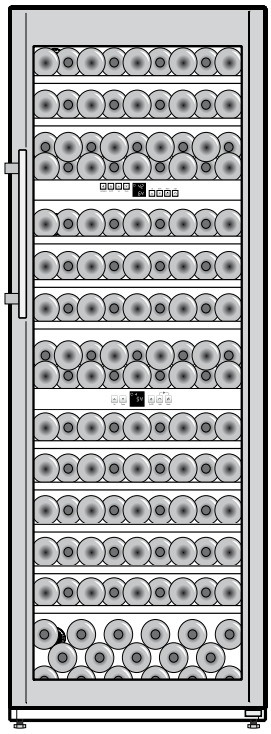

WS 14300

Energy Supply:	115V / 60Hz / 3A
Climate Rating:	SN-ST
Door hinges:	right/reversible
Door:	glass door with stainless steel

- Telescopic wine racks
- Activated charcoal filter
- Pleasant LED-light

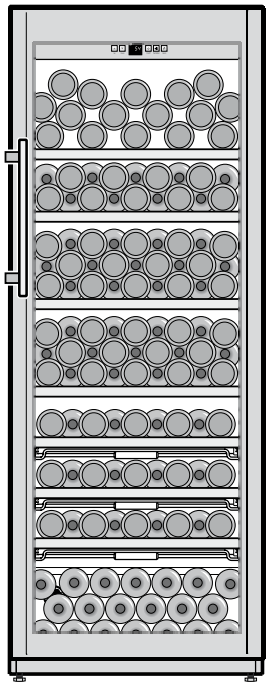

WS 13500

Energy Supply:	115V / 60Hz / 2.5A
Climate Rating:	SN-ST
Door hinges:	right/reversible
Door:	glass door with stainless steel

- 3 Telescopic wine racks
- Fodling shelf to place wine bottles i a presentation position
- Activated charcoal filter

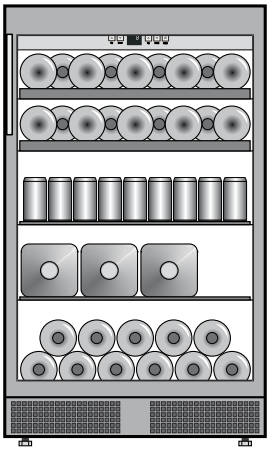

RU 500

Energy Supply:	115V / 60Hz / 1.5A
Climate Rating:	SN-ST
Door hinges:	right/reversible
Door:	glass door with stainless steel

- Telescopic wine racks
- Activated charcoal filter
- Glass shelves with stainless steel trim

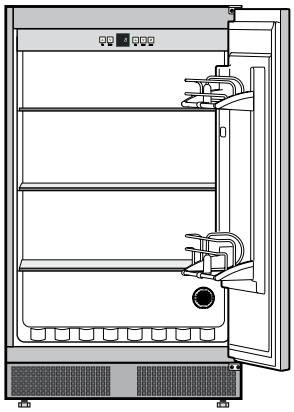

RO 500

Energy Supply:	115V / 60Hz / 2A
Climate Rating:	SN-T
Door hinges:	right/reversible
Door:	stainless steel

- Top door rack adjustable
- Activated charcoal filter
- Glass shelves with stainless steel trim
- Possibility to store bottles at the bottom of the unit

Undercounter Wine Cabinet WU 4000/5600

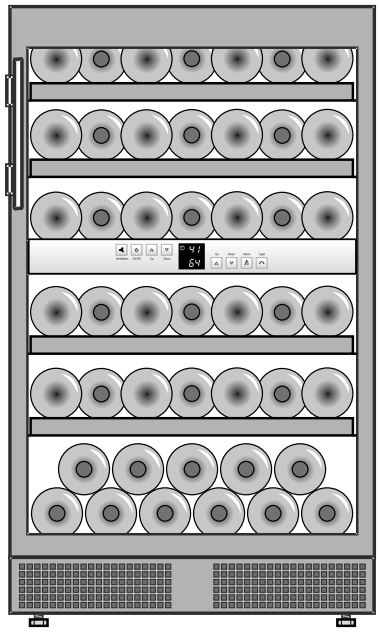

The WU 4000/5600 can be integrated easily into your kitchen: Counter top slots are not required, given that the wine unit ventilates through the toe kick base. The sleek profile door and the interior lighting expresses the elegance of this appliance.

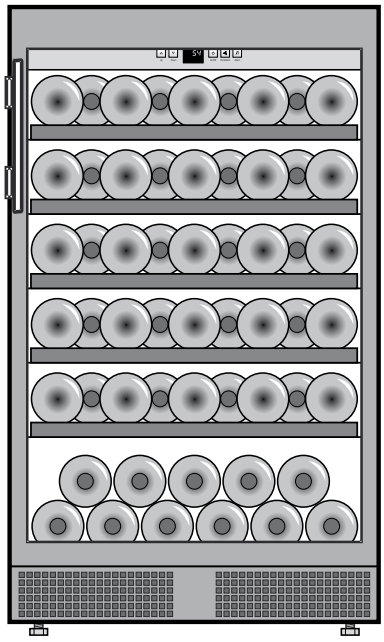

Unit and Cabinet Dimensions WU 4000/5600

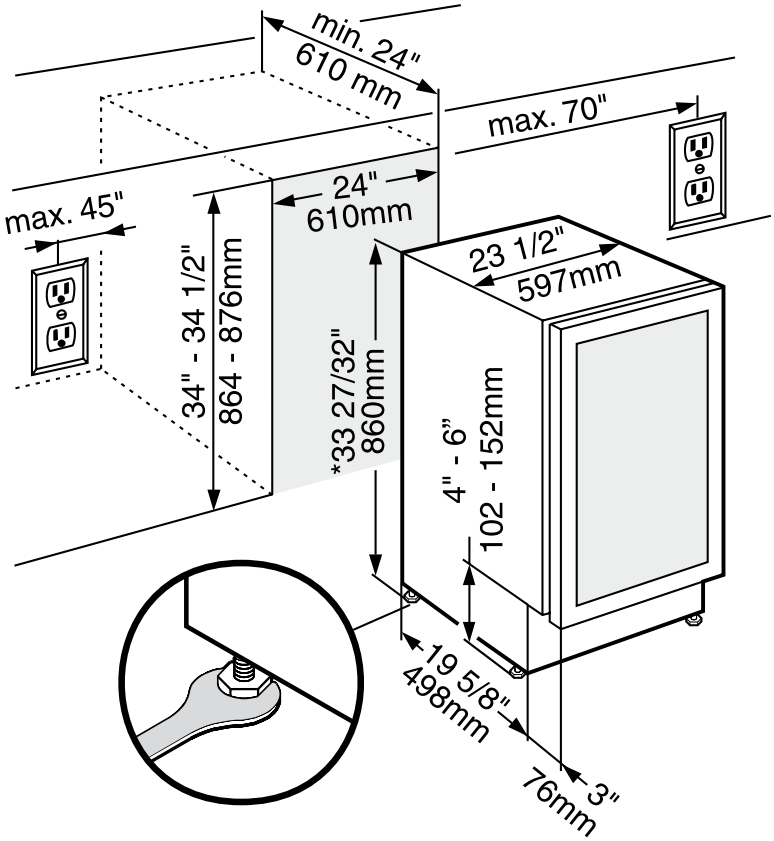

* Overall height can be increased by 2" (50 mm) by adjusting the feet.

Freestanding Wine Cabinet WS 4000

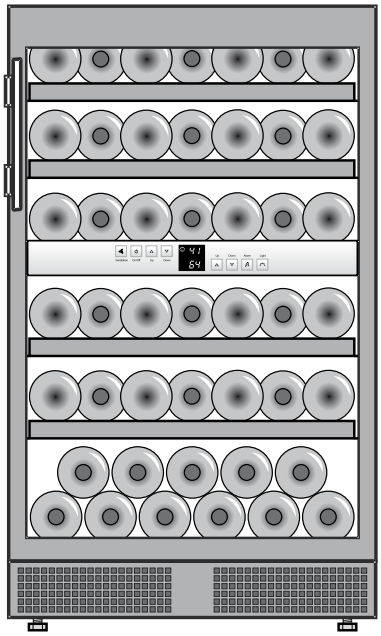

Liebherr wine units are extremely quiet when operating. With its freestanding and stylish design, the WS 4000 can be placed in any room. The timeless stainless steel cabinet harmonizes with your any design, be it in the kitchen or of your living room.

Unit Dimensions WS 4000

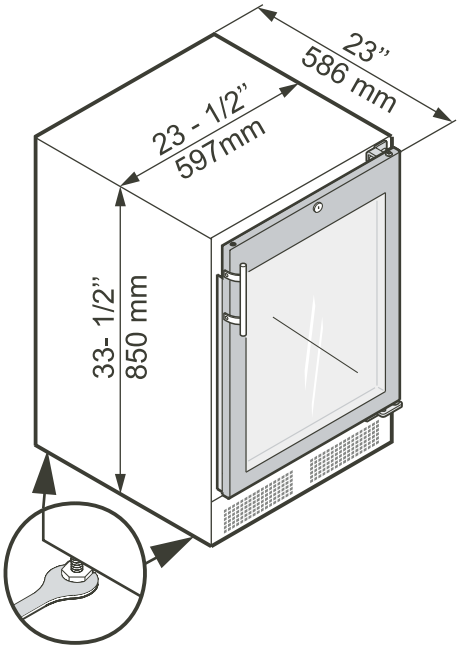

* Overall height can be increased by 5/8" (16 mm) by adjusting the feet.

Built In Wine Cabinet HWS 1800

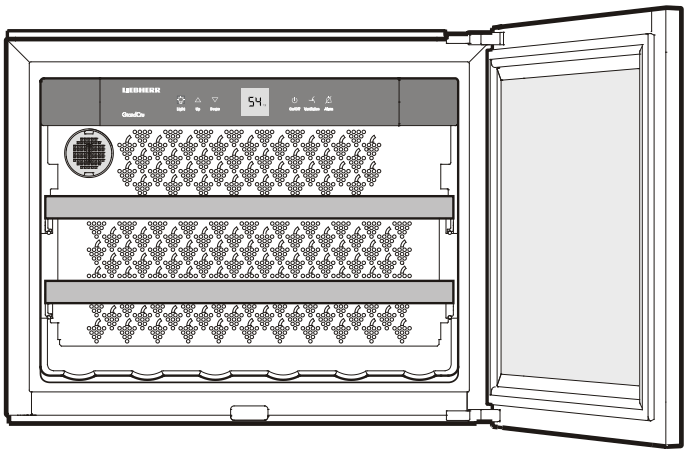

Liebherr lets you gaze at eye-level on the HWS 1800, the fully integrated wine unit that holds 18 bottles in an ideal storage environment. The innovative styling allows the unit to sit flush with cabinetry and its recessed handle maintains a smooth line. When designing the custom kitchen, take advantage of the flexibility to put this unique modular unit anywhere.

Unit and Cabinet Dimensions HWS 1800

IMPORTANT

The HWS 1800 can also be fitted into a 30" wide recess. Therefore the Trim Kit is required. See chapter "Accessoires for Liebherr Wine and Undercounters" on page 19.

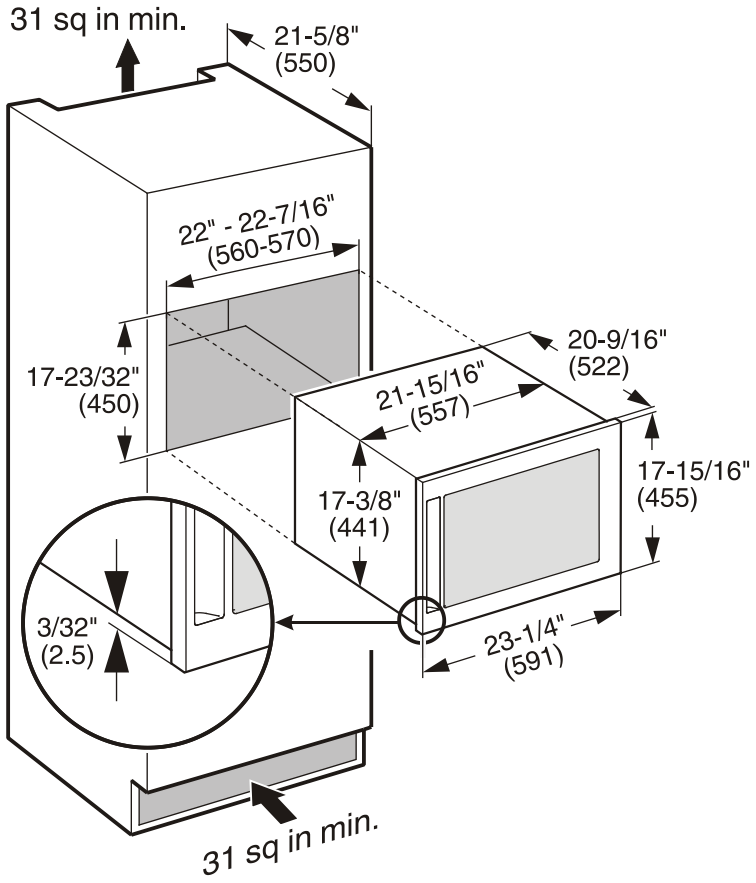

Measurement in brackets are millimeter

Freestanding Wine Cabinet WS 14300

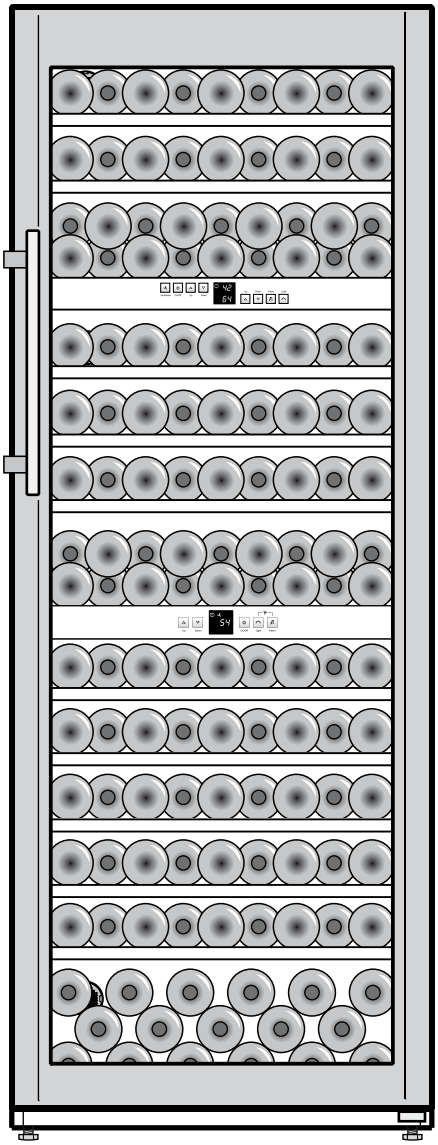

The perfect and most flexible solution for those wine lovers: The three temperature zones of the WS 14300 allow you to store all your preferred wines at the exact temperature you desire: be it champagne, white, red or rose wine.
Every temperature zone can be adjusted separately and independent from the other zones.

Unit and Cabinet Dimensions WS 14300

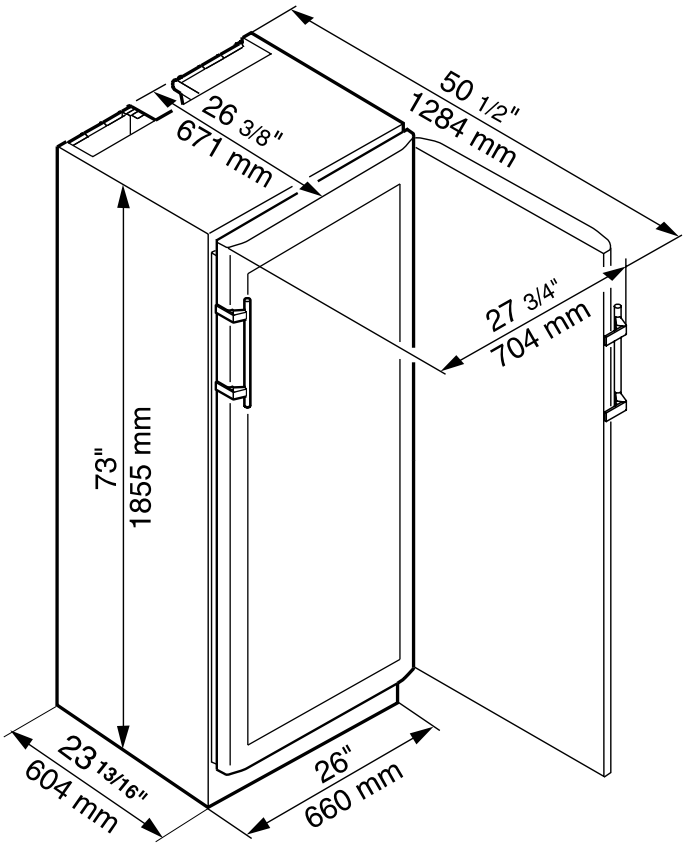

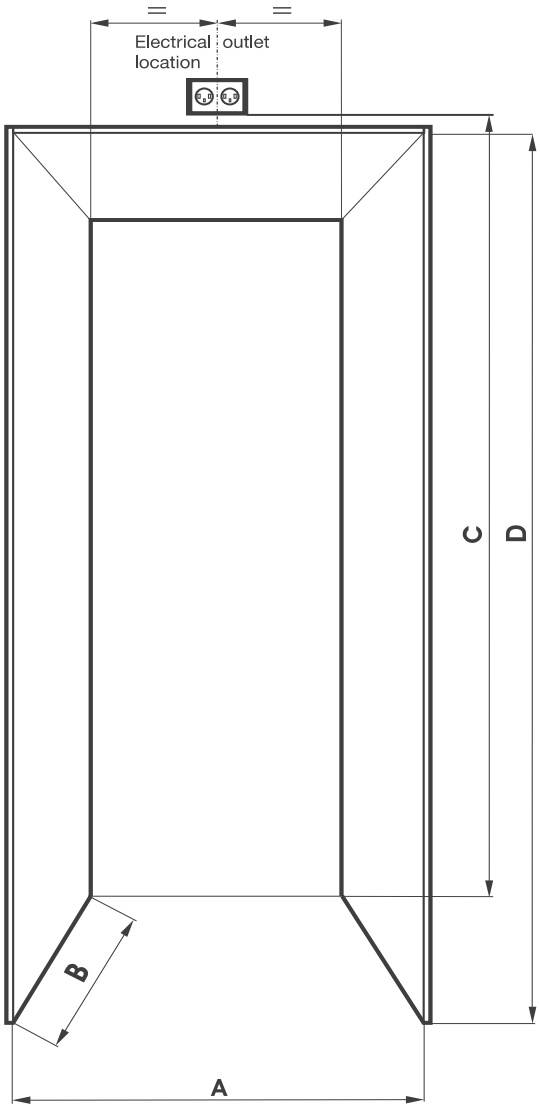

Minimum Cabinet Opening Dimensions:

WS 14300

A.	26"	(660 mm)
B.	24"	(609 mm)
C.	79-3/8"	(2015 mm)
D.	75"	(1905 mm)*

***Note:** The given cabinet opening height dimension includes 2" for ventilation. If you choose to ventilate the appliance above the cabinet or in a soffit, you will need to adjust the height dimension accordingly.

Freestanding Wine Cabinet WS 13500

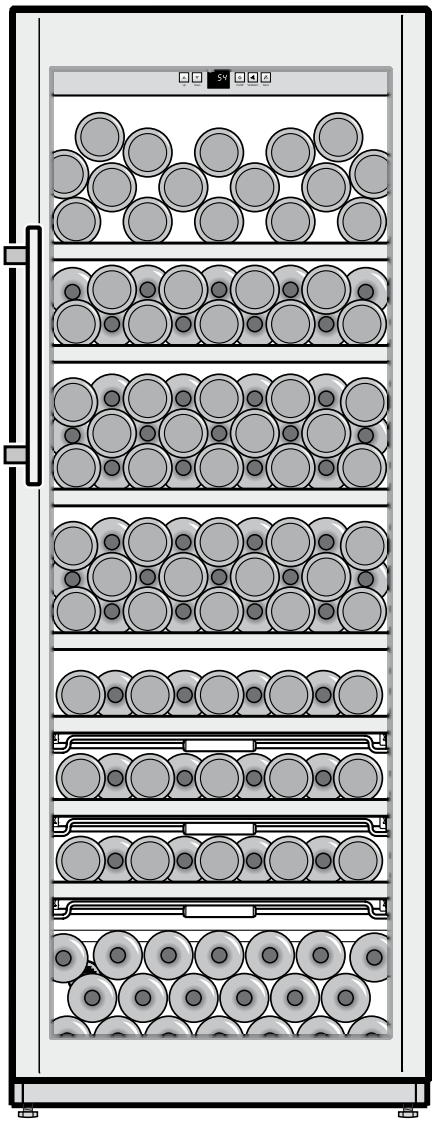

The 26” wide wine storage cabinet WS 13500 can store up to 135 bottles for preserving large supplies of wine and champagne. Perfect for a wine cellar environment, the accurate electronic control system has a digital temperature display for settings between 41° F (5° C) and 68° F (20° C).
The unit provides smart features for best storage conditions - low vibration, minimized light exposure and appropriate humidity levels.

Unit and Cabinet Dimensions WS 13500

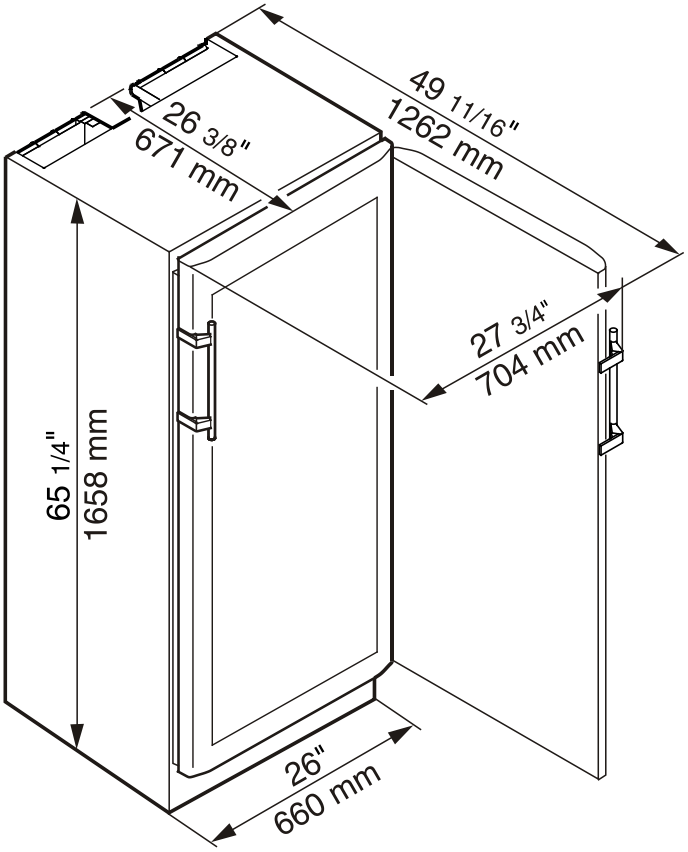

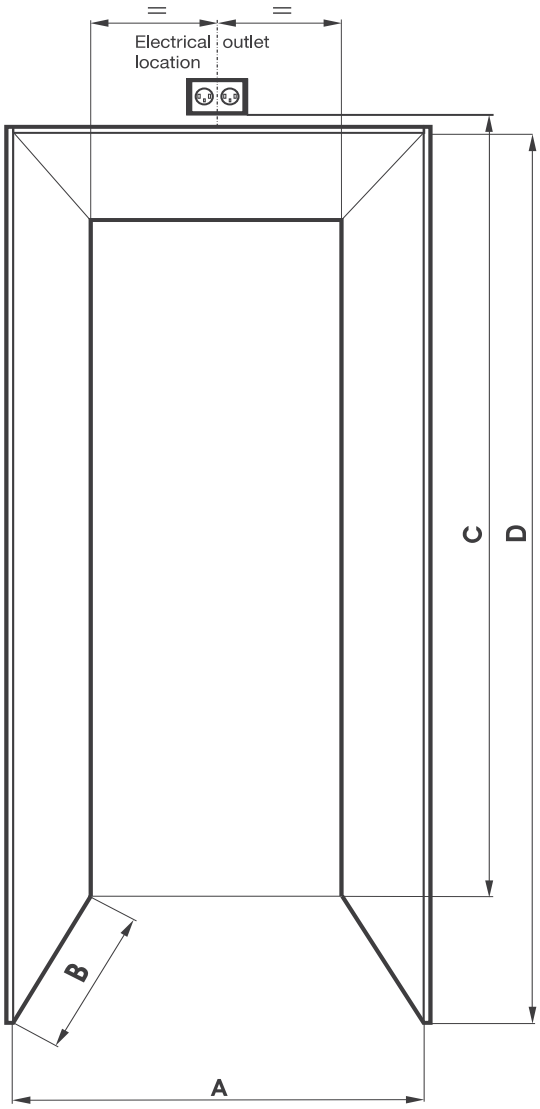

Minimum Cabinet Opening Dimensions:

WS 13500

A.	26"	(660 mm)
B.	24"	(609 mm)
C.	79-3/8"	(2015 mm)
D.	67-1/4"	(1708 mm)*

***Note:** The given cabinet opening height dimension includes 2" for ventilation. If you choose to ventilate the appliance above the cabinet or in a soffit, you will need to adjust the height dimension accordingly.

Undercounter Beverage Center RU 500

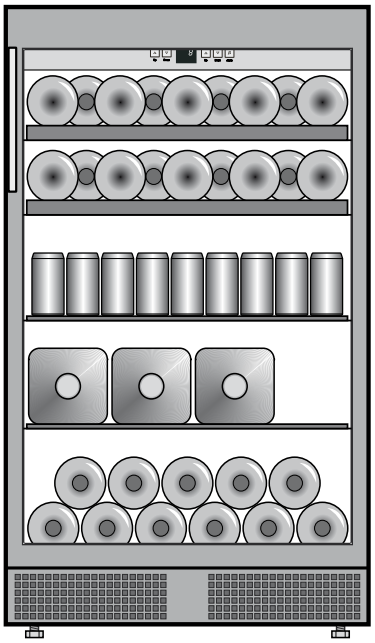

The appliance has two glass storage shelves with stainless steel trim and two pull out racks with wood facings. Bottles and cans can be chilled in this appliance. The electronic control system is situated at the top of the interior and is visible through the glass door.

The RU 500 can be integrated into your kitchen:
Counter top slots are not required, given that the unit ventilates through the toe kick base.

Unit and Cabinet Dimensions RU 500

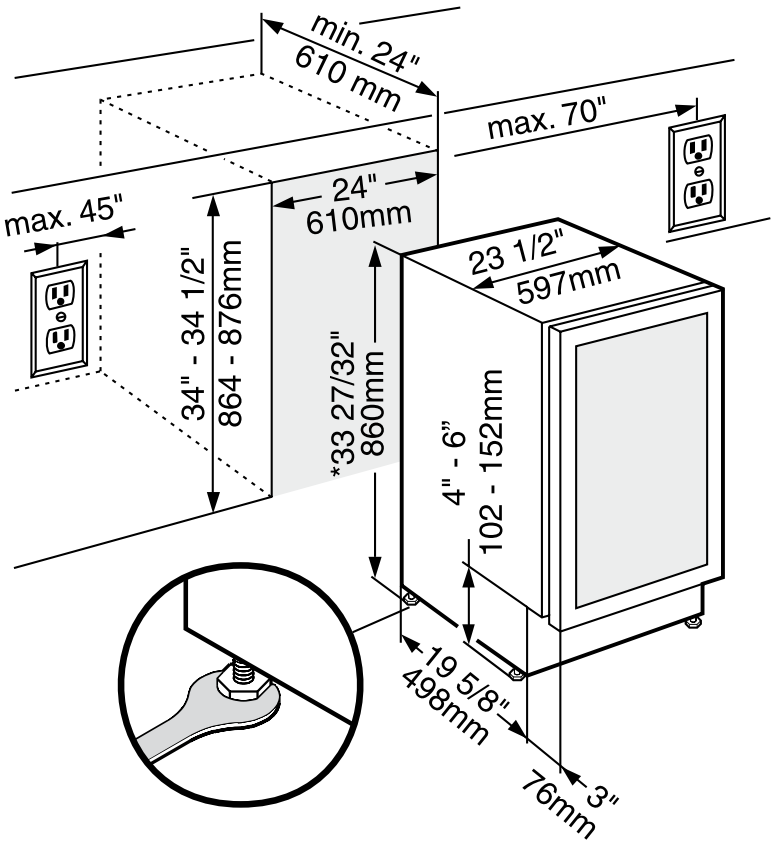

* Overall height can be increased by 2" (50 mm) by adjusting the feet.

Outdoor Refrigerator RO 500

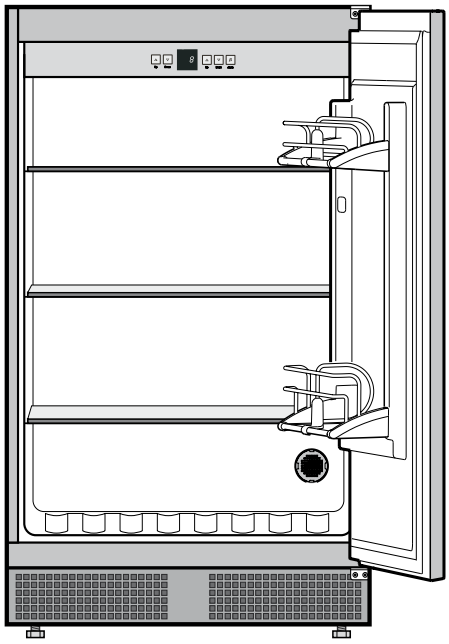

The appliance has three glass storage shelves with stainless steel trim and two door racks of which one is adjustable. There is also the possibility to store bottles at the bottom of the unit. The electronic control system is situated at the top of the interior.

The RO 500 can be installed under a countertop:
Counter top slots are not required, given that the unit ventilates through the toe kick base.

Unit and Cabinet Dimensions RO 500

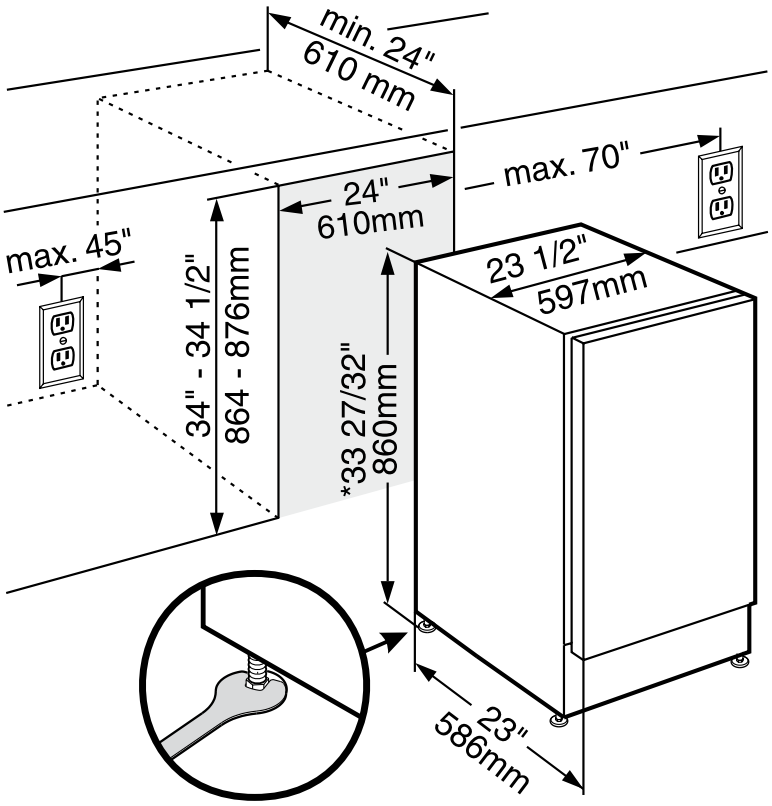

* Overall height can be increased by 5/8" (16 mm) by adjusting the feet.

Accessories for Liebherr Wine and Undercounters

Kits may be necessary to complete this unit's installation or to apply it in a different manner than its original intent. If a kit is necessary, contact your Liebherr retailer or distributor. All installation materials for accessories are included with the kits.

Image	Article number	Name of the item	For use with model
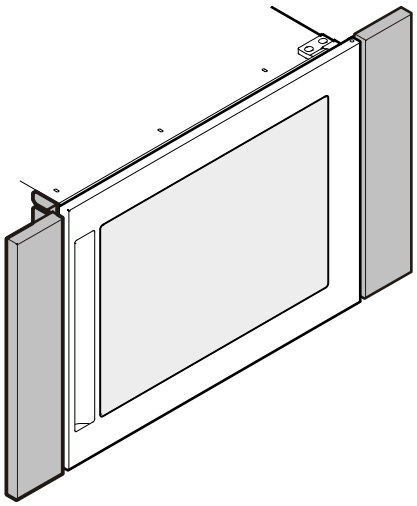	9900 319-00	Trim Kit for 30" wide recess	HWS 1800
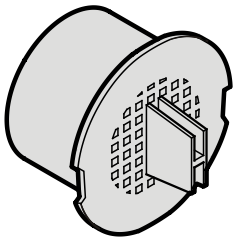	7440 999-00	Charcoal Filter	WU 4000 WU 5600 WS 4000 HWS 1800 WS 14300 WS 13500 RU 500 RO 500